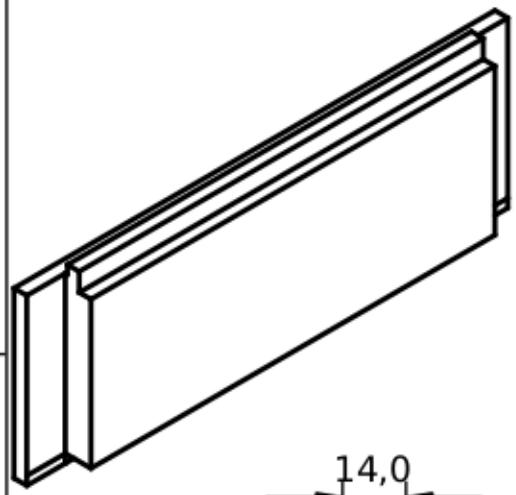

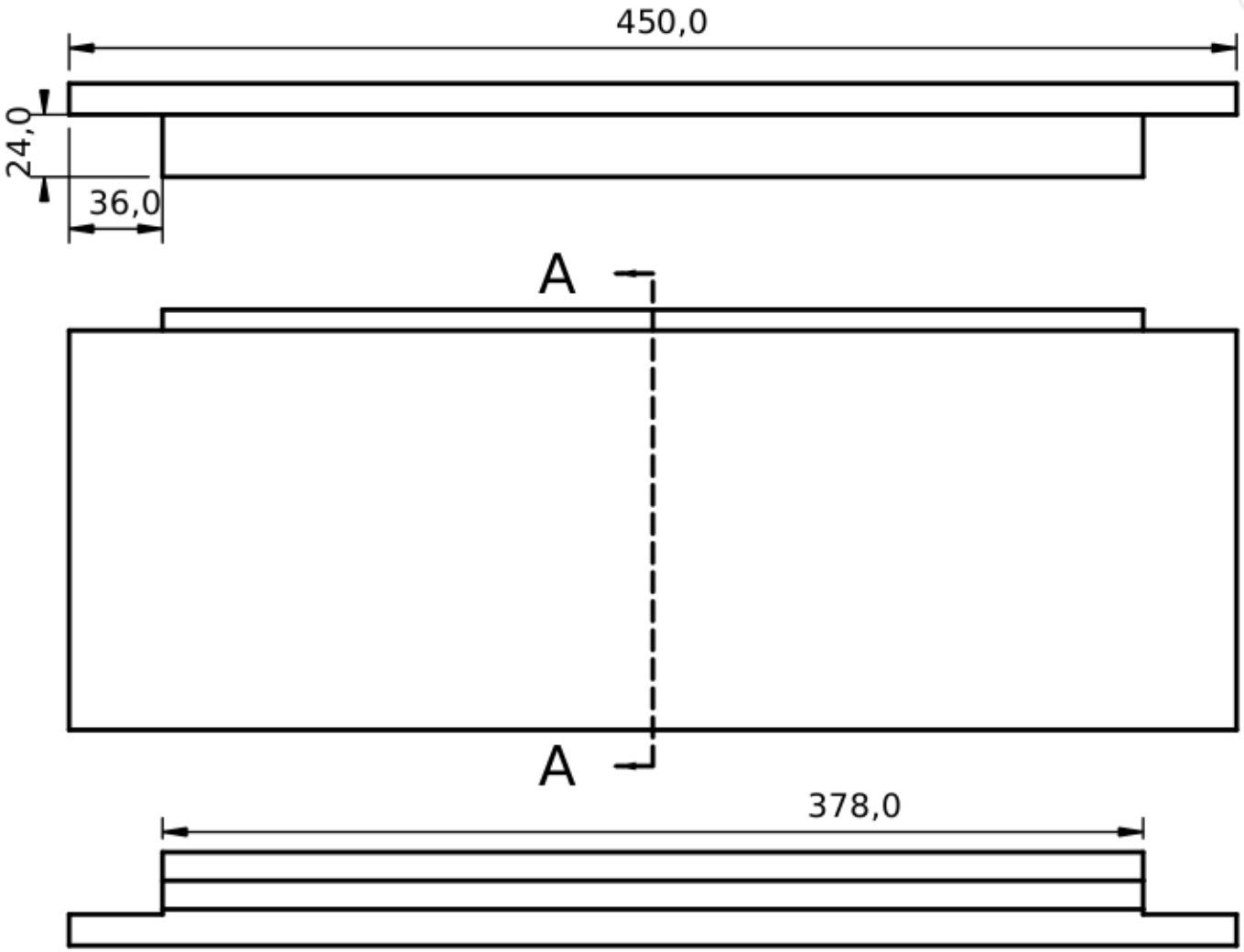

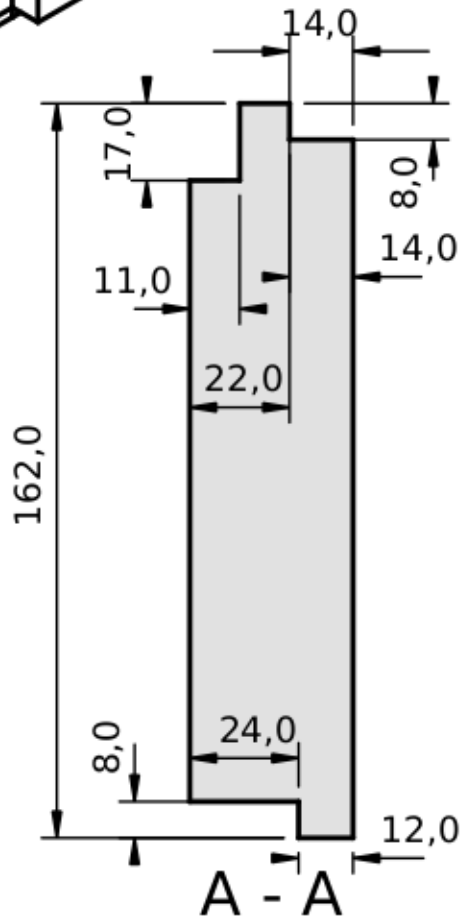

DESIGNED BY: Simon Litt DATE: 2019/12/22		Перед корпуса (x2)		
SIZE A4				
SCALE 0,5	WEIGHT (kg) -	DRAWING NUMBER http://apis-by.info/	SHEET 1	

This drawing is our property; it can't be reproduced or communicated without our written consent.